AMA-IE2 132M6 (B34L)

AMTECS

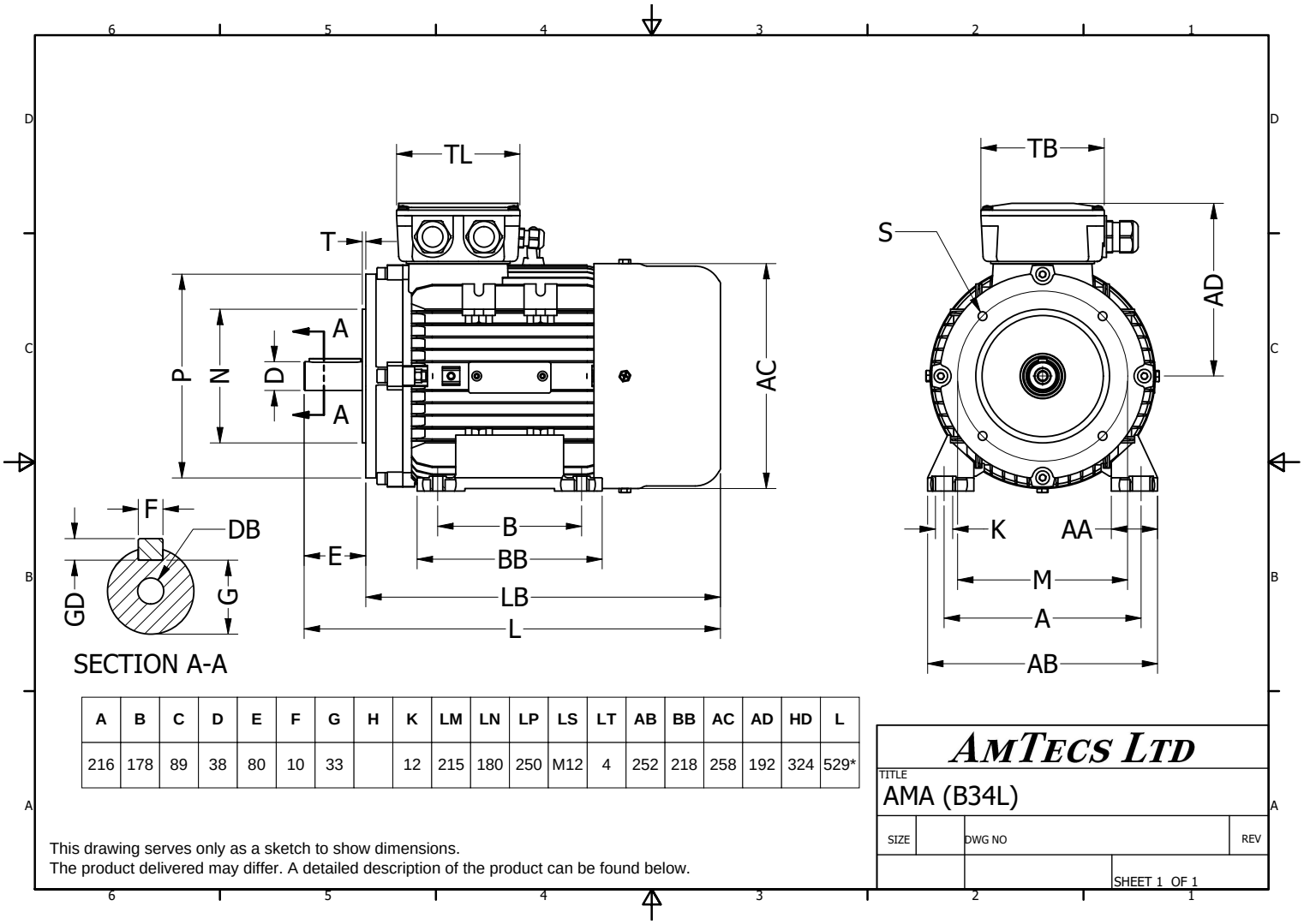

A	B	C	D	E	F	G	H	K	LM	LN	LP	LS	LT	AB	BB	AC	AD	HD	L
216	178	89	38	80	10	33		12	215	180	250	M12	4	252	218	258	192	324	529*

This drawing serves only as a sketch to show dimensions.
The product delivered may differ. A detailed description of the product can be found below.

Specification	**IEC 60034-1**	Efficiency class	**IE2**
Manufacturer	**AmTecs**	Load data	100%
Motor type	**AMA-IE2 132M6**	Efficiency	**84.6** %
Rated power	**4** kW **S1** Duty	Power factor	**0.76**
Speed	**965** rpm	Sound pressure level (1m)	**59** dB(A)
Voltage	**400V / 690V**	Resistance R20 (open)	
Frequency	**50** Hz	Resistance R20 (Delta)	
Connection	**Delta / Star**		
Full load current	**8.96 A / 5.17 A**	Full load torque	**39.6** Nm
No-load current		Starting / Full load torque	**2.9**
Enclosure	**IP55**	Pull up / Full load torque	
Insulation class	**F (temp. rise B)**	Pull out / Full load torque	**2.7**
Max. ambient temp	**40** °C		
Max. altitude	**1000** mtr above sea level		
Comment			
Cable entry	**M25 x 1.5**	Starting / Full load current (DOL)	**5**
Construction	**Aluminium**	Starting / Full load current (Y/D)	
Weight	**53** Kg	Rotor Inertia	
Type number		Bearing DE	**6308**
Warranty		Bearing NDE	**6308**

AmTecs Ltd
Charnham Park, Hungerford
Berkshire, RG17 0YT
Tel: +44 (0) 1488 686970
Fax: +44 (0) 1488 686968
sales@amtecs.co.uk
www.amtecs.co.uk

We make all efforts to better our products. Versions, technical data and figures could be changed therefore. They are not binding before written confirmation.