# AMA3-IE3 112M2 (B14L)

AMTECS

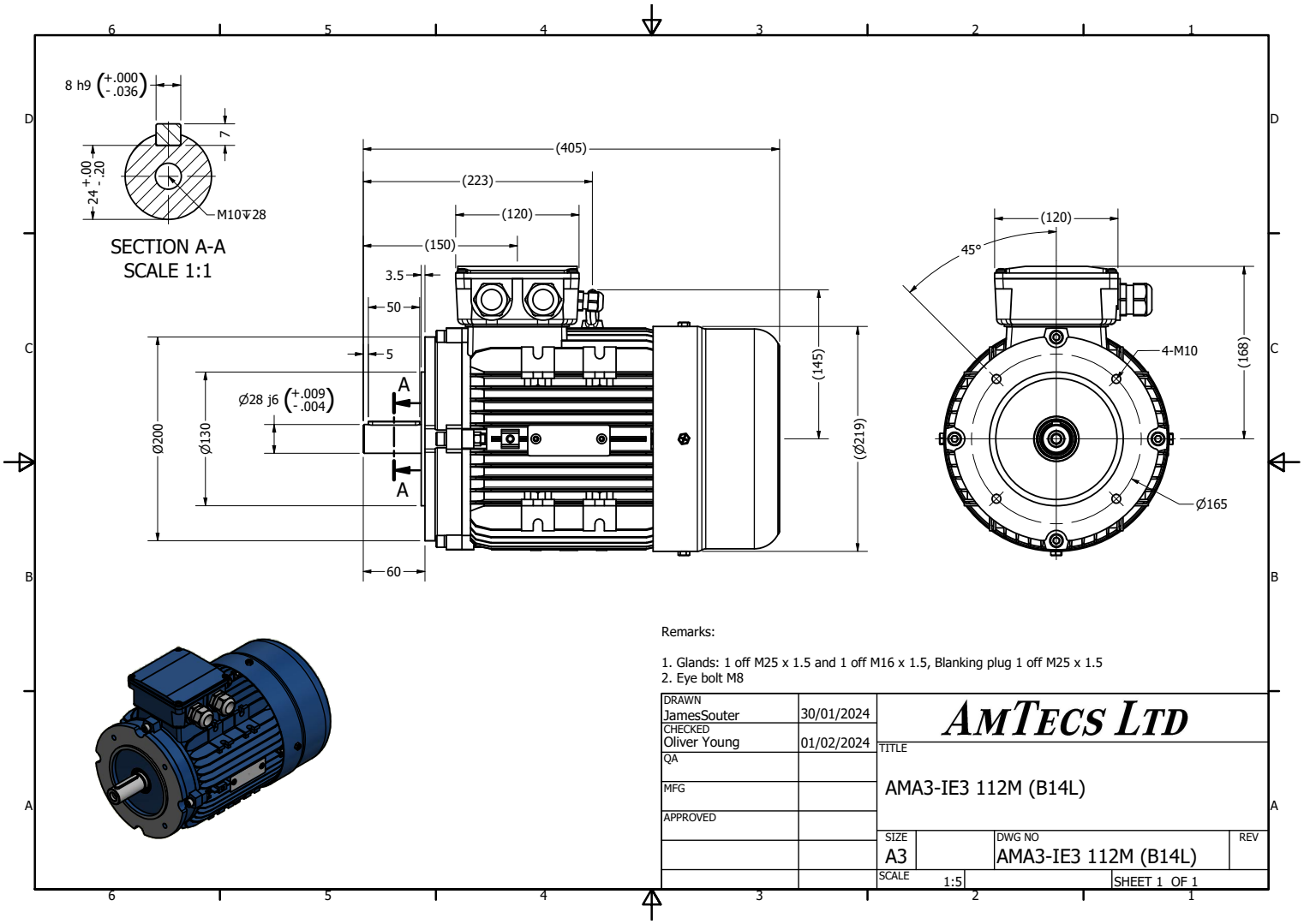


| | | | |
|---|---|---|---|
| Specification | **IEC 60034-1** | Efficiency class | **IE3** |
| Manufacturer | **AmTecs** | Load data | 100% |
| Motor type | **AMA3-IE3 112M2** | Efficiency | **88.1** % |
| Rated power | **4** kW **S1** Duty | Power factor | **0.88** |
| Speed | **2905** rpm | Sound pressure level (1m) | **67** dB(A) |
| Voltage | **400V / 690V** | Resistance R20 (open) | |
| Frequency | **50** Hz | Resistance R20 (Delta) | |
| Connection | **Delta / Star** | | |
| Full load current | **7.4 A / 4.27 A** | Full load torque | **13.1** Nm |
| No-load current | | Starting / Full load torque | **1.8** |
| Enclosure | **IP55** | Pull up / Full load torque | |
| Insulation class | **F (temp. rise B)** | Pull out / Full load torque | **2.9** |
| Max. ambient temp | **40** °C | | |
| Max. altitude | **1000** mtr above sea level | | |
| Comment | | | |
| Cable entry | **M25 x 1.5** | Starting / Full load current (DOL) | **8** |
| Construction | **Aluminium** | Starting / Full load current (Y/D) | |
| Weight | **34** Kg | Rotor Inertia | |
| Type number | | Bearing DE | **6306** |
| Warranty | | Bearing NDE | **6306** |


**AmTecs Ltd**
Charnham Park, Hungerford
Berkshire, RG17 0YT
Tel: +44 (0) 1488 686970
Fax: +44 (0) 1488 686968
sales@amtecs.co.uk
www.amtecs.co.uk



*We make all efforts to better our products. Versions, technical data and figures could be changed therefore. They are not binding before written confirmation.*