AM3-IE3 280M2 (B5)

AMTECS

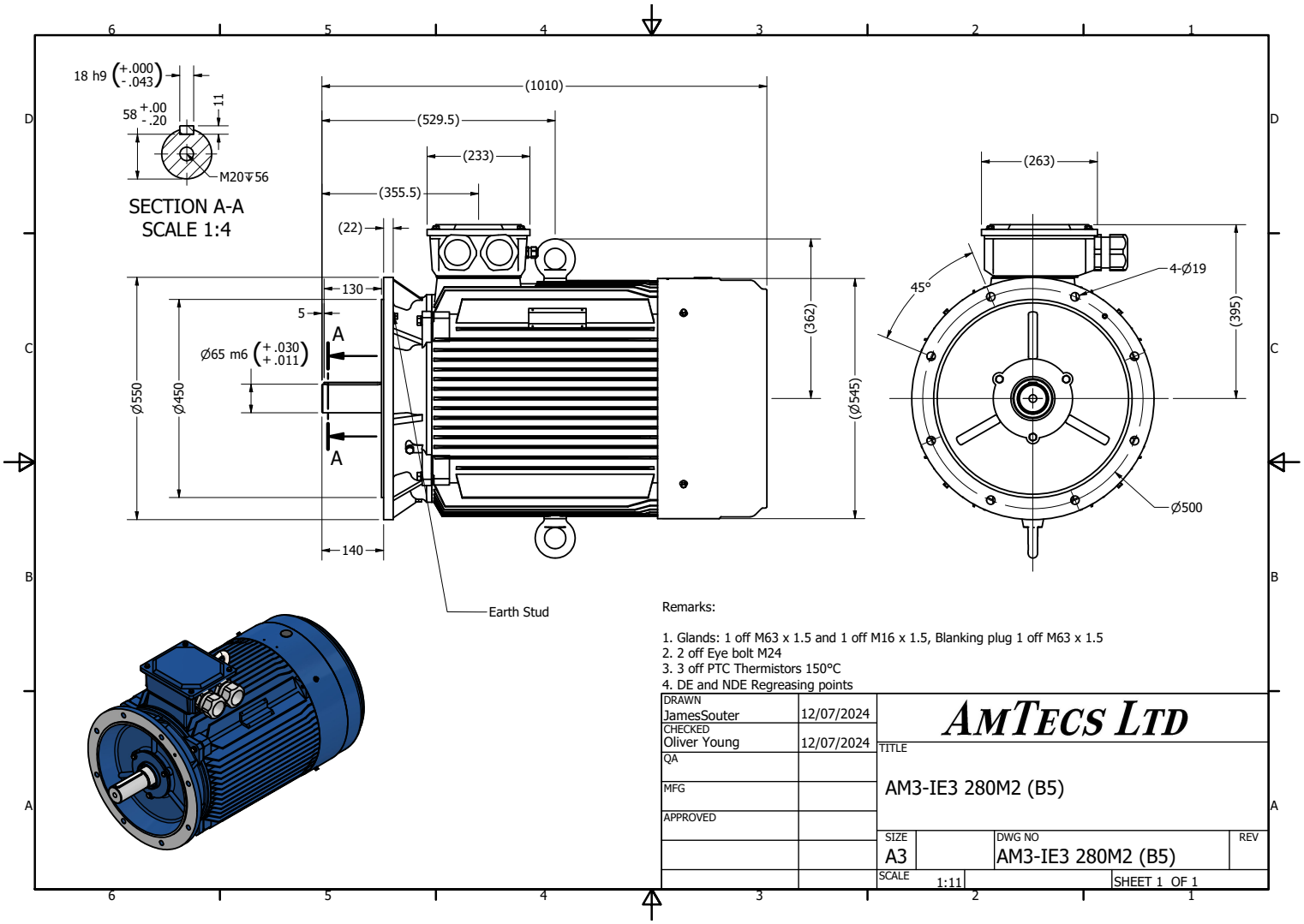

Remarks:

1. Glands: 1 off M63 x 1.5 and 1 off M16 x 1.5, Blanking plug 1 off M63 x 1.5
2. 2 off Eye bolt M24
3. 3 off PTC Thermistors 150°C
4. DE and NDE Regreasing points

DRAWN	JamesSouter	12/07/2024
CHECKED	Oliver Young	12/07/2024
QA		
MFG		
APPROVED		

AMTECS LTD

TITLE: AM3-IE3 280M2 (B5)

SIZE	DWG NO	REV
A3	AM3-IE3 280M2 (B5)	

SCALE 1:11 — SHEET 1 OF 1

Specification	**IEC 60034-1**	Efficiency class	**IE3**
Manufacturer	**AmTecs**	Load data	100%
Motor type	**AM3-IE3 280M2**	Efficiency	**95** %
Rated power	**90** kW **S1** Duty	Power factor	**0.89**
Speed	**2970** rpm	Sound pressure level (1m)	**91** dB(A)
Voltage	**400V / 690V**	Resistance R20 (open)	
Frequency	**50** Hz	Resistance R20 (Delta)	
Connection	**Delta / Star**		
Full load current	**153.6 A / 89.1 A**	Full load torque	**289.4** Nm
No-load current		Starting / Full load torque	**2.6**
Enclosure	**IP55**	Pull up / Full load torque	
Insulation class	**F (temp. rise B)**	Pull out / Full load torque	**3**
Max. ambient temp	**40** °C		
Max. altitude	**1000** mtr above sea level		
Comment			
Cable entry	**M63 x 1.5**	Starting / Full load current (DOL)	**7.5**
Construction	**Cast Iron**	Starting / Full load current (Y/D)	
Weight	**600** Kg	Rotor Inertia	
Type number		Bearing DE	**6314**
Warranty		Bearing NDE	**6314**

AmTecs Ltd
Charnham Park, Hungerford
Berkshire, RG17 0YT
Tel: +44 (0) 1488 686970
Fax: +44 (0) 1488 686968
sales@amtecs.co.uk
www.amtecs.co.uk

We make all efforts to better our products. Versions, technical data and figures could be changed therefore. They are not binding before written confirmation.