AMAS-R 63K2 (B35)

AMTECS

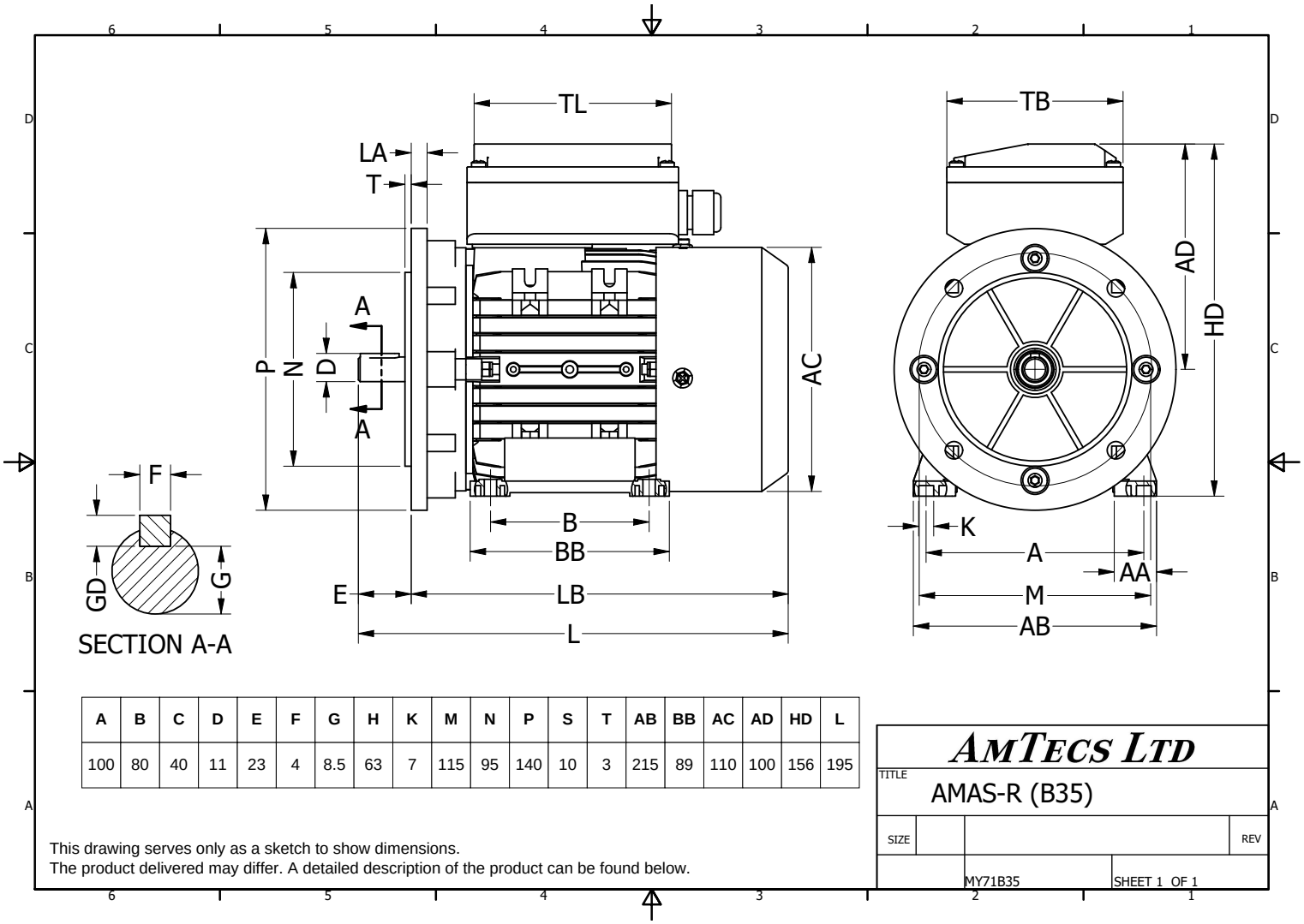

A	B	C	D	E	F	G	H	K	M	N	P	S	T	AB	BB	AC	AD	HD	L
100	80	40	11	23	4	8.5	63	7	115	95	140	10	3	215	89	110	100	156	195

This drawing serves only as a sketch to show dimensions.
The product delivered may differ. A detailed description of the product can be found below.

Specification	**IEC 60034-1**	Efficiency class	**IE1**
Manufacturer	**AmTecs**	Load data	100%
Motor type	**AMAS-R 63K2**	Efficiency	**60** %
Rated power	**0.18** kW **S1** Duty	Power factor	**0.92**
Speed	**2800** rpm	Sound pressure level (1m)	**70** dB(A)
Voltage	**220V**	Resistance R20 (open)	
Frequency	**50** Hz	Resistance R20 (Delta)	
Connection	**Single Phase**		
Full load current	**1.48 A**	Full load torque	**0.63** Nm
No-load current		Starting / Full load torque	**0.4**
Enclosure	**IP55**	Pull up / Full load torque	
Insulation class	**F (temp. rise B)**	Pull out / Full load torque	**1.7**
Max. ambient temp	**40** °C		
Max. altitude	**1000** mtr above sea level		
Comment			
Cable entry	**M20 x 1.5**	Starting / Full load current (DOL)	
Construction	**Aluminium**	Starting / Full load current (Y/D)	
Weight	**3.9** Kg	Rotor Inertia	
Type number		Bearing DE	**6201**
Warranty		Bearing NDE	**6201**
Run Capacitor	**8uf/450V**		

AmTecs Ltd
Charnham Park, Hungerford
Berkshire, RG17 0YT
Tel: +44 (0) 1488 686970
Fax: +44 (0) 1488 686968
sales@amtecs.co.uk
www.amtecs.co.uk

We make all efforts to better our products. Versions, technical data and figures could be changed therefore. They are not binding before written confirmation.