# AMAS-R-IE2 63 K2 (B35)

AMTECS

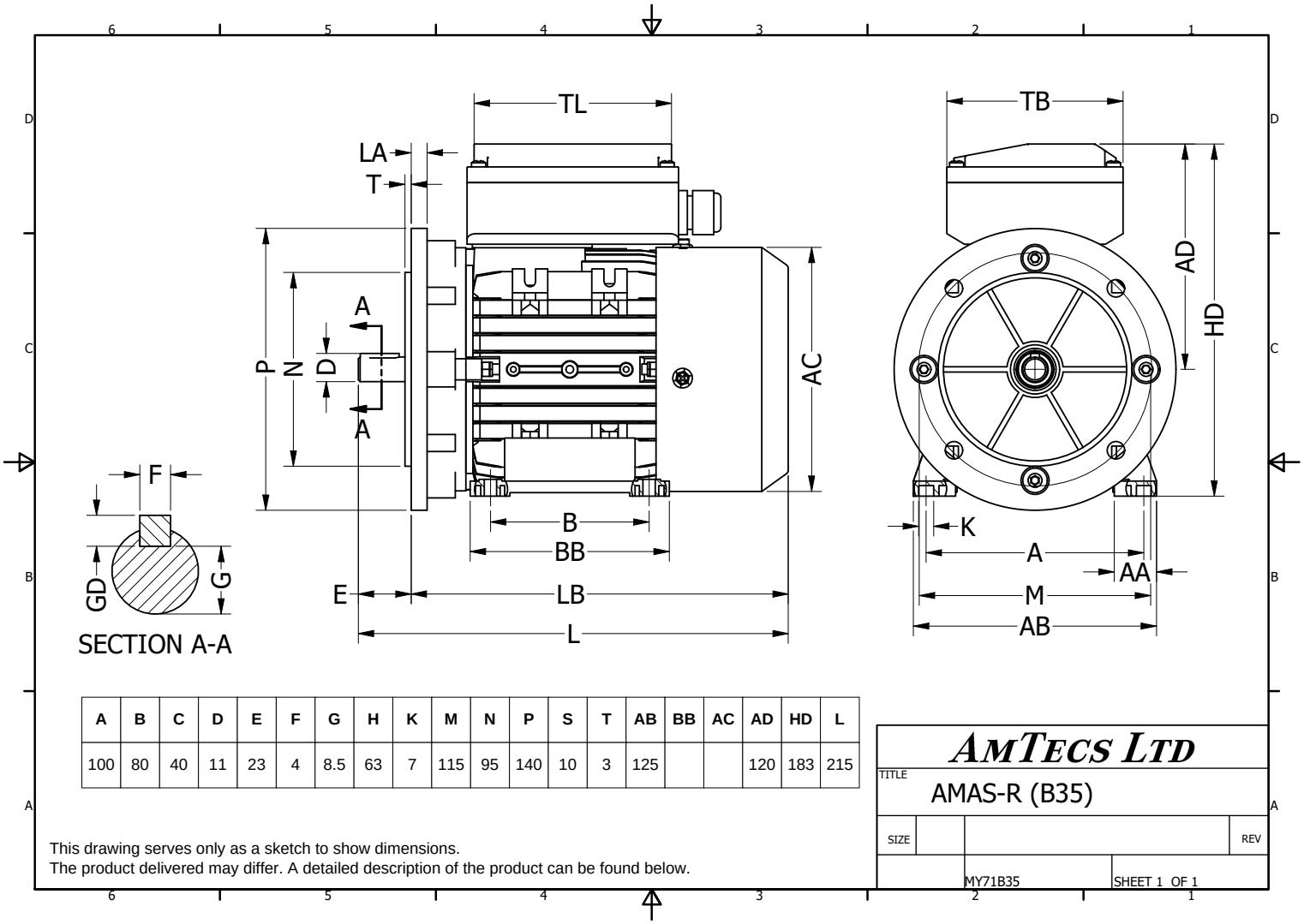


| A | B | C | D | E | F | G | H | K | M | N | P | S | T | AB | BB | AC | AD | HD | L |
|---|---|---|---|---|---|---|---|---|---|---|---|---|---|---|---|---|---|---|---|
| 100 | 80 | 40 | 11 | 23 | 4 | 8.5 | 63 | 7 | 115 | 95 | 140 | 10 | 3 | 125 | | | 120 | 183 | 215 |

This drawing serves only as a sketch to show dimensions.
The product delivered may differ. A detailed description of the product can be found below.

| | | | |
|---|---|---|---|
| Specification | **IEC 60034-1** | Efficiency class | **IE2** |
| Manufacturer | **AmTecs** | Load data | 100% |
| Motor type | **AMAS-R-IE2 63 K2** | Efficiency | **60.4** % |
| Rated power | **0.18** kW **S1** Duty | Power factor | **0.95** |
| Speed | **2790** rpm | Sound pressure level (1m) | **65** dB(A) |
| Voltage | **220V** | Resistance R20 (open) | |
| Frequency | **50** Hz | Resistance R20 (Delta) | |
| Connection | **Single Phase** | | |
| Full load current | **1.36 A** | Full load torque | **0.62** Nm |
| No-load current | | Starting / Full load torque | **0.5** |
| Enclosure | **IP55** | Pull up / Full load torque | |
| Insulation class | **F (temp. rise B)** | Pull out / Full load torque | **1.8** |
| Max. ambient temp | **40** °C | | |
| Max. altitude | **1000** mtr above sea level | | |
| Comment | | | |
| Cable entry | **M20 x 1.5** | Starting / Full load current (DOL) | |
| Construction | **Aluminium** | Starting / Full load current (Y/D) | |
| Weight | **4.4** Kg | Rotor Inertia | |
| Type number | | Bearing DE | **6201** |
| Warranty | | Bearing NDE | **6201** |
| Run Capacitor | **6uf/450V** | | |
| Protection Device | **Thermal Reset Switch** | | |


**AmTecs Ltd**
Charnham Park, Hungerford
Berkshire, RG17 0YT
Tel: +44 (0) 1488 686970
Fax: +44 (0) 1488 686968
sales@amtecs.co.uk
www.amtecs.co.uk



*We make all efforts to better our products. Versions, technical data and figures could be changed therefore. They are not binding before written confirmation.*