AMA3-IE3 100L6 (B35)

AMTECS

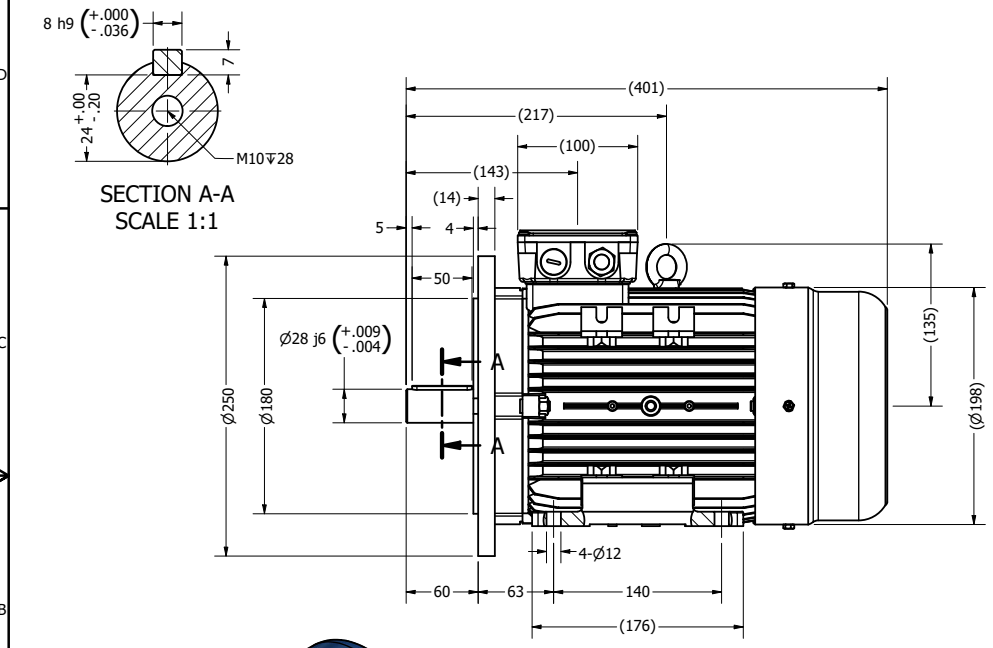

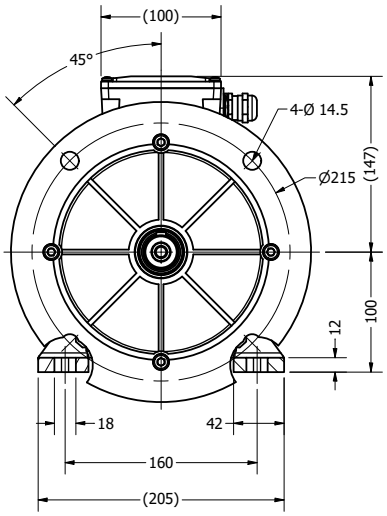

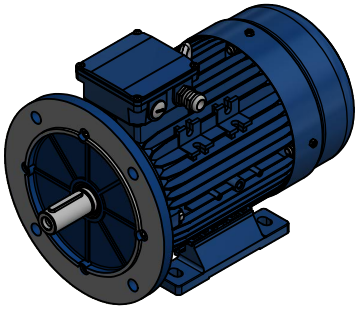

Remarks:

1. Glands: 1 off M20 x 1.5 and 1 off M16 x 1.5, Blanking plug 1 off M20 x 1.5
2. Eye bolt M8

DRAWN JamesSouter	29/01/2024	AMTECS LTD
CHECKED Oliver Young	31/01/2024	TITLE
QA		AMA3-IE3 100L (B35)
MFG		
APPROVED		SIZE A3 / DWG NO AMA3-IE3 100L (B35) / REV
		SCALE 1:3 / SHEET 1 OF 1

Specification	**IEC 60034-1**	Efficiency class	**IE3**
Manufacturer	**AmTecs**	Load data	100%
Motor type	**AMA3-IE3 100L6**	Efficiency	**82.5** %
Rated power	**1.8** kW **S1** Duty	Power factor	**0.73**
Speed	**1152** rpm	Sound pressure level (1m)	**58** dB(A)
Voltage	**277 / 480V**	Resistance R20 (open)	
Frequency	**60** Hz	Resistance R20 (Delta)	
Connection	**Delta / Star**		
Full load current	**6.25 A / 3.59 A**	Full load torque	**14.9** Nm
No-load current		Starting / Full load torque	**2.5**
Enclosure	**IP55**	Pull up / Full load torque	
Insulation class	**F (temp. rise B)**	Pull out / Full load torque	**3.0**
Max. ambient temp	**40** °C		
Max. altitude	**1000** mtr above sea level		
Comment			
Cable entry	**M20 x 1.5**	Starting / Full load current (DOL)	**6.9**
Construction	**Aluminium**	Starting / Full load current (Y/D)	
Weight	**30** Kg	Rotor Inertia	
Type number		Bearing DE	**6206**
Warranty		Bearing NDE	**6206**

AmTecs Ltd
Charnham Park, Hungerford
Berkshire, RG17 0YT
Tel: +44 (0) 1488 686970
Fax: +44 (0) 1488 686968
sales@amtecs.co.uk
www.amtecs.co.uk

We make all efforts to better our products. Versions, technical data and figures could be changed therefore. They are not binding before written confirmation.