AMA3-IE3 112M2 (B34S)

AMTECS

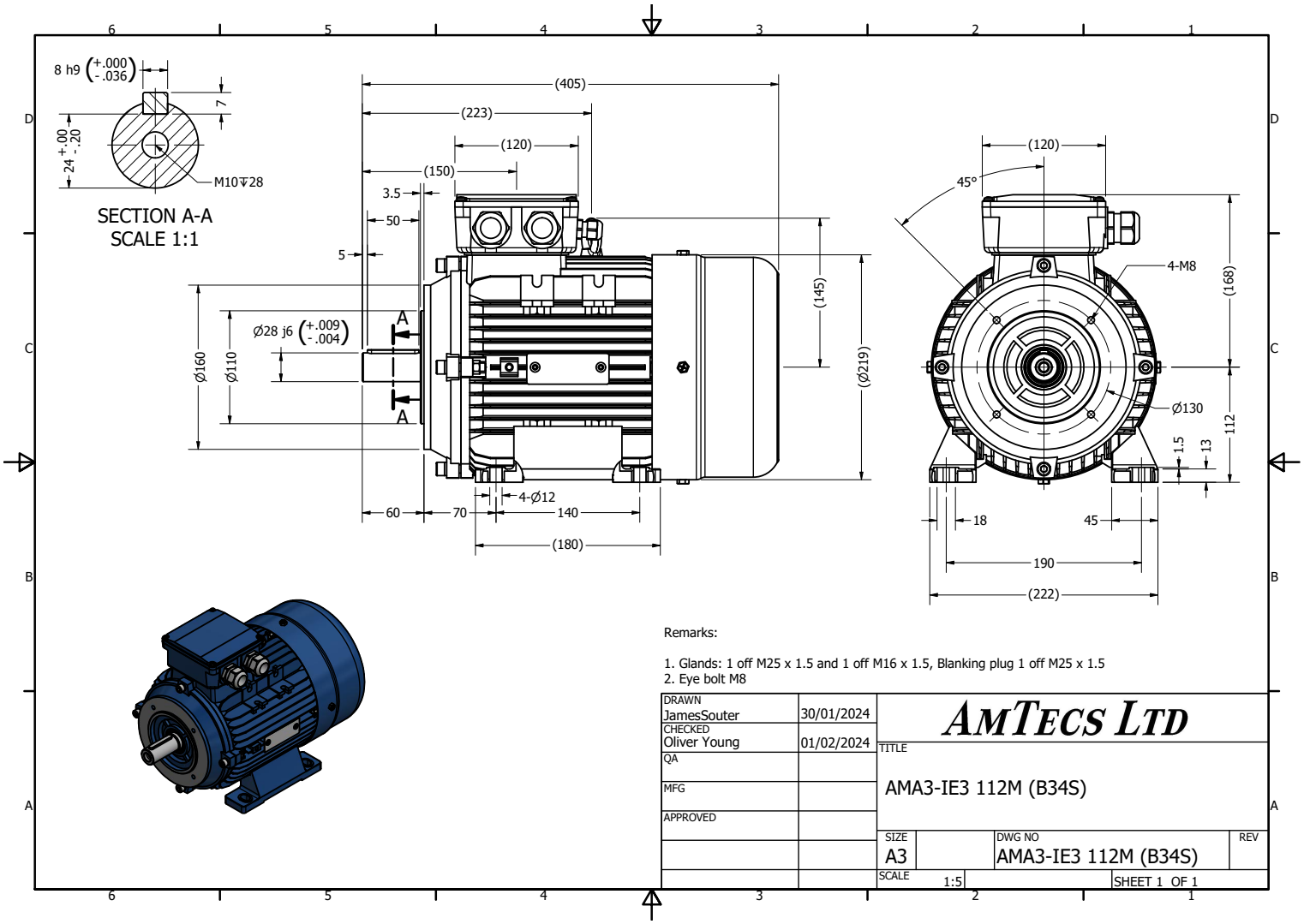

Specification	**IEC 60034-1**	Efficiency class	**IE3**
Manufacturer	**AmTecs**	Load data	100%
Motor type	**AMA3-IE3 112M2**	Efficiency	**88.1** %
Rated power	**4** kW **S1** Duty	Power factor	**0.88**
Speed	**2905** rpm	Sound pressure level (1m)	**67** dB(A)
Voltage	**400V / 690V**	Resistance R20 (open)	
Frequency	**50** Hz	Resistance R20 (Delta)	
Connection	**Delta / Star**		
Full load current	**7.4 A / 4.27 A**	Full load torque	**13.1** Nm
No-load current		Starting / Full load torque	**1.8**
Enclosure	**IP55**	Pull up / Full load torque	
Insulation class	**F (temp. rise B)**	Pull out / Full load torque	**2.9**
Max. ambient temp	**40** °C		
Max. altitude	**1000** mtr above sea level		
Comment			
Cable entry	**M25 x 1.5**	Starting / Full load current (DOL)	**8**
Construction	**Aluminium**	Starting / Full load current (Y/D)	
Weight	**34** Kg	Rotor Inertia	
Type number		Bearing DE	**6306**
Warranty		Bearing NDE	**6306**

AmTecs Ltd
Charnham Park, Hungerford
Berkshire, RG17 0YT
Tel: +44 (0) 1488 686970
Fax: +44 (0) 1488 686968
sales@amtecs.co.uk
www.amtecs.co.uk

We make all efforts to better our products. Versions, technical data and figures could be changed therefore. They are not binding before written confirmation.