AM3-IE3 225M2 (B35)

AMTECS

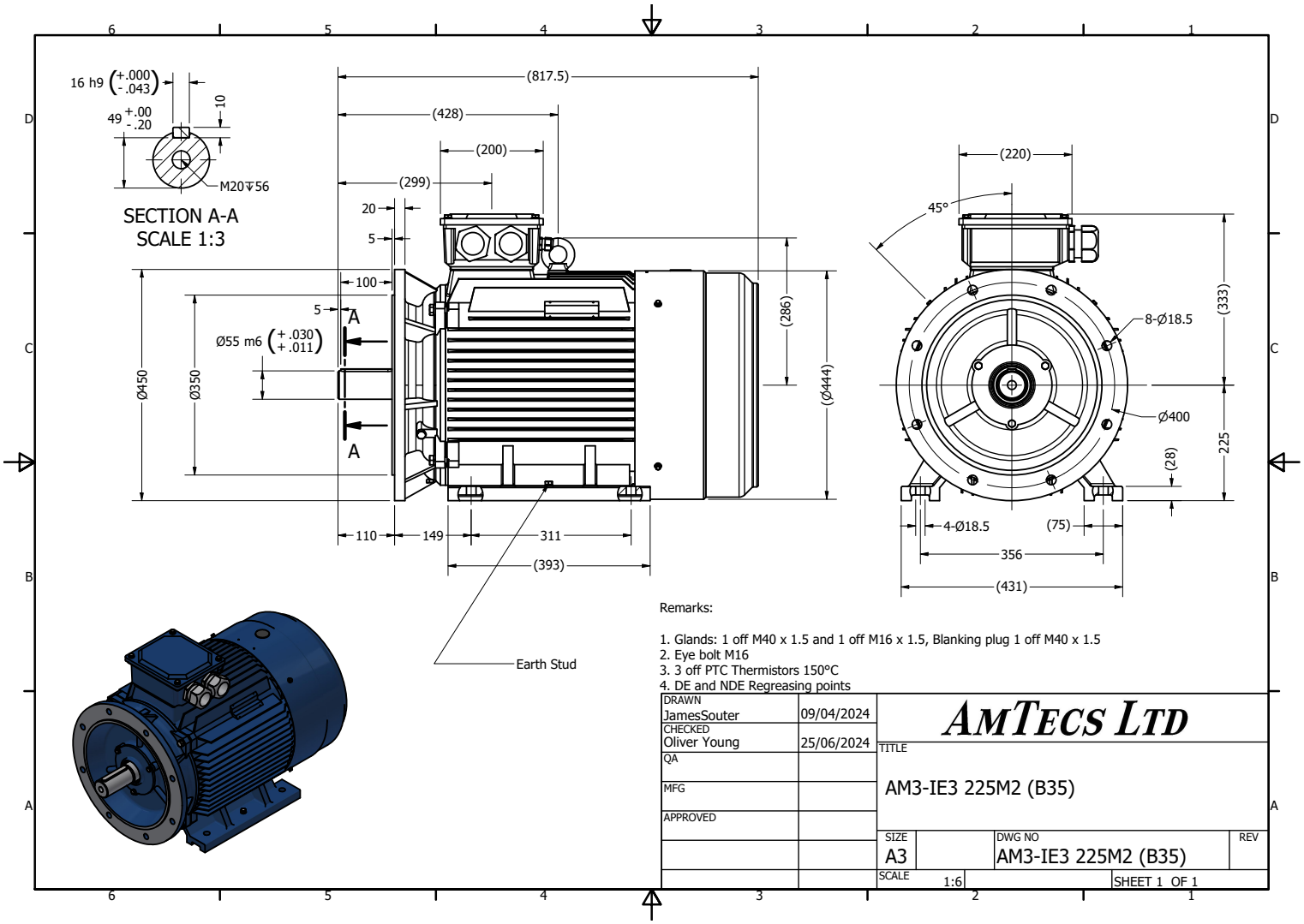

Specification	**IEC 60034-1**	Efficiency class	**IE3**
Manufacturer	**AmTecs**	Load data	100%
Motor type	**AM3-IE3 225M2**	Efficiency	**94** %
Rated power	**54** kW **S1** Duty	Power factor	**0.89**
Speed	**3564** rpm	Sound pressure level (1m)	**91** dB(A)
Voltage	**480 / 820V**	Resistance R20 (open)	
Frequency	**60** Hz	Resistance R20 (Delta)	
Connection	**Delta / Star**		
Full load current	**77.6 A / 45 A**	Full load torque	**144.7** Nm
No-load current		Starting / Full load torque	**2.5**
Enclosure	**IP55**	Pull up / Full load torque	
Insulation class	**F (temp. rise B)**	Pull out / Full load torque	**2.9**
Max. ambient temp	**40** °C		
Max. altitude	**1000** mtr above sea level		
Comment			
Cable entry	**M40 X 1.5**	Starting / Full load current (DOL)	**9.5**
Construction	**Cast Iron**	Starting / Full load current (Y/D)	
Weight	**324** Kg	Rotor Inertia	
Type number		Bearing DE	**6312**
Warranty		Bearing NDE	**6312**

AmTecs Ltd
Charnham Park, Hungerford
Berkshire, RG17 0YT
Tel: +44 (0) 1488 686970
Fax: +44 (0) 1488 686968
sales@amtecs.co.uk
www.amtecs.co.uk

We make all efforts to better our products. Versions, technical data and figures could be changed therefore. They are not binding before written confirmation.