AMAS-R-IE2 63 G2 (B35)

AMTECS

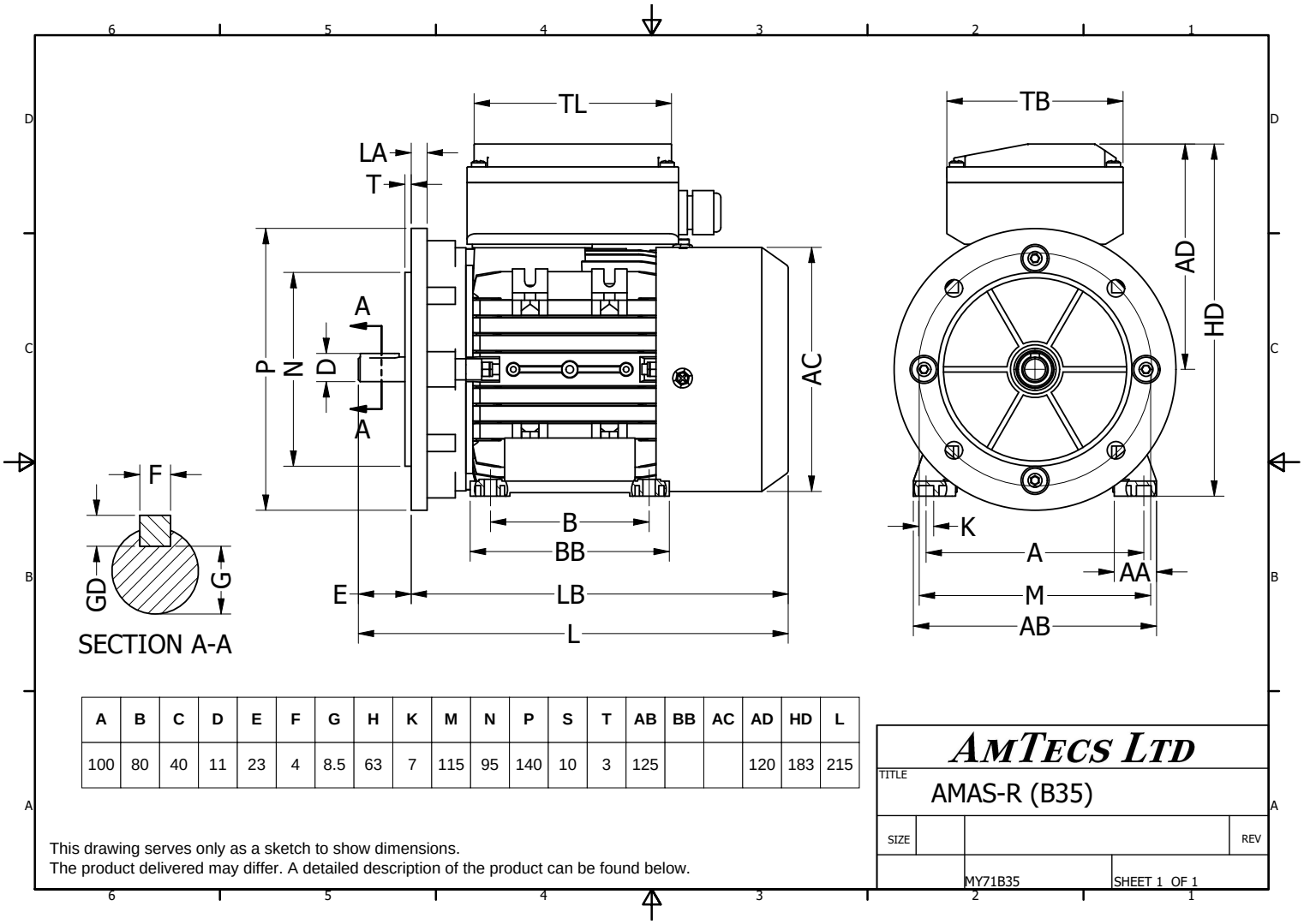

A	B	C	D	E	F	G	H	K	M	N	P	S	T	AB	BB	AC	AD	HD	L
100	80	40	11	23	4	8.5	63	7	115	95	140	10	3	125			120	183	215

This drawing serves only as a sketch to show dimensions.
The product delivered may differ. A detailed description of the product can be found below.

Specification	**IEC 60034-1**	Efficiency class	**IE2**
Manufacturer	**AmTecs**	Load data	100%
Motor type	**AMAS-R-IE2 63 G2**	Efficiency	**64.8** %
Rated power	**0.25** kW **S1** Duty	Power factor	**0.98**
Speed	**2780** rpm	Sound pressure level (1m)	**65** dB(A)
Voltage	**220V**	Resistance R20 (open)	
Frequency	**50** Hz	Resistance R20 (Delta)	
Connection	**Single Phase**		
Full load current	**1.71 A**	Full load torque	**0.86** Nm
No-load current		Starting / Full load torque	**0.5**
Enclosure	**IP55**	Pull up / Full load torque	
Insulation class	**F (temp. rise B)**	Pull out / Full load torque	**2**
Max. ambient temp	**40** °C		
Max. altitude	**1000** mtr above sea level		
Comment			
Cable entry	**M20 x 1.5**	Starting / Full load current (DOL)	
Construction	**Aluminium**	Starting / Full load current (Y/D)	
Weight	**4.6** Kg	Rotor Inertia	
Type number		Bearing DE	**6201**
Warranty		Bearing NDE	**6201**
Run Capacitor	**12uF/450V**		
Protection Device	**Thermal Reset Switch**		

AmTecs Ltd
Charnham Park, Hungerford
Berkshire, RG17 0YT
Tel: +44 (0) 1488 686970
Fax: +44 (0) 1488 686968
sales@amtecs.co.uk
www.amtecs.co.uk

We make all efforts to better our products. Versions, technical data and figures could be changed therefore. They are not binding before written confirmation.