# AMAS-SR-IE2 112 M2 (B34S)

AMTECS

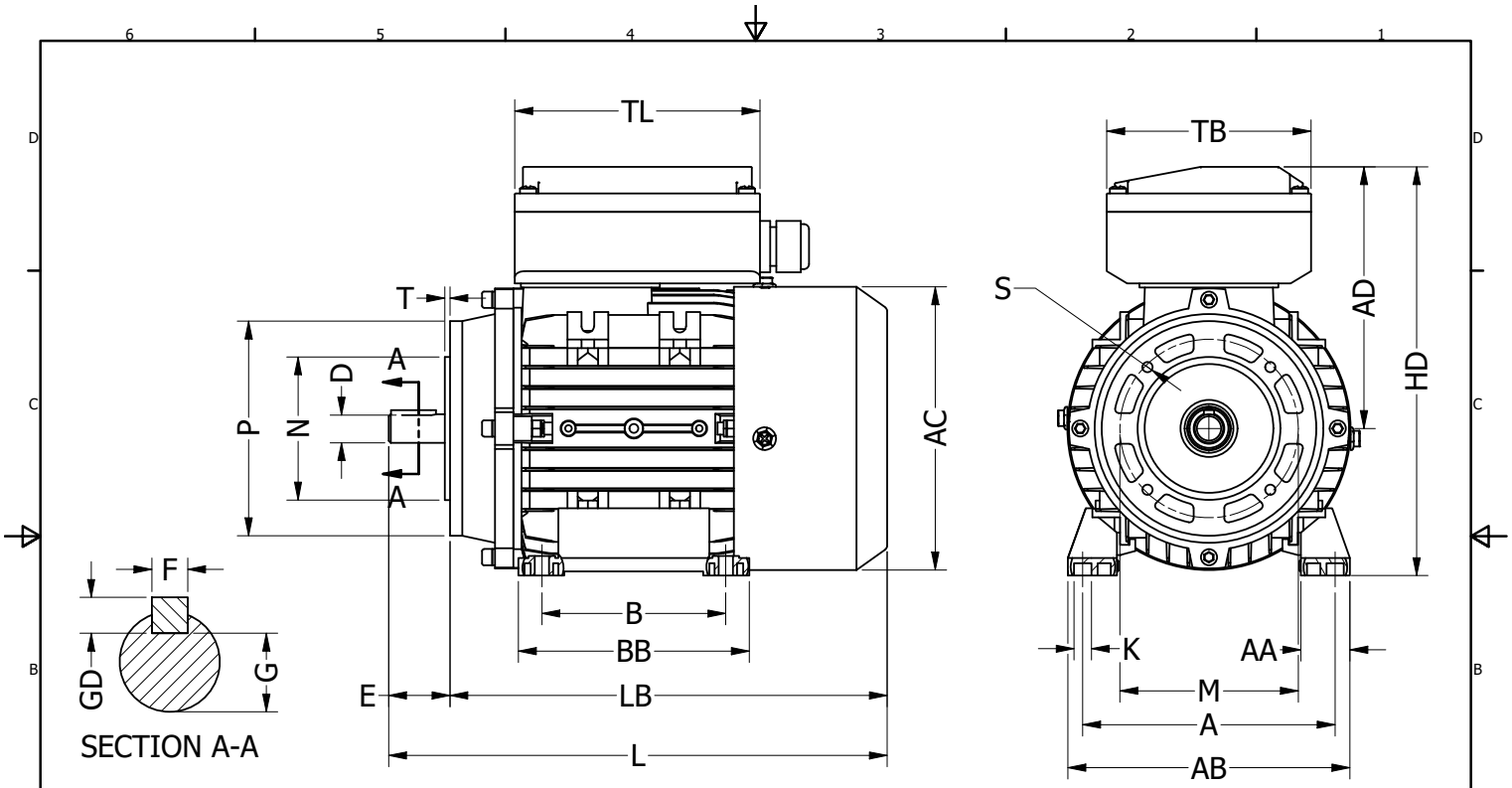


| A | B | C | D | E | F | G | H | K | M | N | P | S | T | AB | BB | AC | AD | HD | L |
|---|---|---|---|---|---|---|---|---|---|---|---|---|---|---|---|---|---|---|---|
| 190 | 140 | 70 | 28 | 60 | 8 | 24 | 112 | 12 | 130 | 110 | 160 | M8 | 3.5 | 222 | | | 178 | 290 | 430 |

AMTECS LTD

TITLE AMAS-SR (B34)

SIZE | REV | SHEET 1 OF 1

This drawing serves only as a sketch to show dimensions.
The product delivered may differ. A detailed description of the product can be found below.

| | | | |
|---|---|---|---|
| Specification | **IEC 60034-1** | Efficiency class | **IE2** |
| Manufacturer | **AmTecs** | Load data | 100% |
| Motor type | **AMAS-SR-IE2 112 M2** | Efficiency | **85.8** % |
| Rated power | **3.7** kW **S1** Duty | Power factor | **0.95** |
| Speed | **2900** rpm | Sound pressure level (1m) | **83** dB(A) |
| Voltage | **220V** | Resistance R20 (open) | |
| Frequency | **50** Hz | Resistance R20 (Delta) | |
| Connection | **Single Phase** | | |
| Full load current | **21.3 A** | Full load torque | **13.17** Nm |
| No-load current | | Starting / Full load torque | **2.2** |
| Enclosure | **IP55** | Pull up / Full load torque | |
| Insulation class | **F (temp. rise B)** | Pull out / Full load torque | **1.7** |
| Max. ambient temp | **40** °C | | |
| Max. altitude | **1000** mtr above sea level | | |
| Comment | | | |
| Cable entry | **M25 x 1.5** | Starting / Full load current (DOL) | |
| Construction | **Aluminium** | Starting / Full load current (Y/D) | |
| Weight | **36.3** Kg | Rotor Inertia | |
| Type number | | Bearing DE | **6306** |
| Warranty | | Bearing NDE | **6206** |
| Run Capacitor | **40uf/450V** | | |
| Start Capacitor | **600uf/250V** | | |
| Protection Device | **Thermal Reset Switch** | | |


**AmTecs Ltd**
Charnham Park, Hungerford
Berkshire, RG17 0YT
Tel: +44 (0) 1488 686970
Fax: +44 (0) 1488 686968
sales@amtecs.co.uk
www.amtecs.co.uk



*We make all efforts to better our products. Versions, technical data and figures could be changed therefore. They are not binding before written confirmation.*